HYDAC INTERNATIONAL

CM-W-...-ET

Conditioning Module

Operating and Maintenance Instructions

Document-no.: 3161811°

Trademarks

The trademarks of other companies are exclusively used for the products of those companies.

Exclusion of liability

However, errors cannot be ruled out. Consequently, we accept no liability for such errors as may exist nor for any damage or loss whatsoever which may arise as a result of such errors. The content of the manual is checked regularly. Any corrections required will be incorporated in subsequent editions. We welcome any suggestions for improvements.

Technical specifications are subject to change without notice.

All details are subject to technical modifications.

HYDAC Filtertechnik GmbH

Industriegebiet

D-66280 Sulzbach/Saar

Germany

Tel.: ++49 (0) 6897 / 509 – 01

Fax: ++49 (0) 6897 / 509 – 846

Content

Preface

For you, as the owner of a product manufactured by us, we have produced this manual, comprising the most important instructions for its **operation** and **maintenance.**

It is intended to help you become acquainted with the ins and outs of the product and use it properly.

You should keep it in the vicinity of the product so it is always at your fingertips.

Sometimes the information contained in the documentation cannot always keep up with changes made to the product as we attach considerable importance to keeping our products cutting-edge. Consequently, there might be deviations in technical details, illustrations and dimensions.

If you discover errors while reading the documentation or have suggestions or other useful information, please don't hesitate to contact us:

HYDAC Filtertechnik GmbH
Technical Documentation Department
Postfach 12 51
66273 Sulzbach / Saar, Germany

Fax: ++49 (0) 6897 509 846
E-mail: filtersysteme@hydac.com

The editor would welcome your involvement.

Our motto: "Putting experience into practice"

Customer Service

If you have any questions, suggestions, or encounter any problems of a technical nature, please don't hesitate to contact us. When contacting us, please always include the model/type designation and article no. of the product:

Fax: ++49 (0) 6897 509 846
Email: filtersysteme@hydac.com

Modifications to the Product

We would like to point out that changes to the product (e.g. purchasing options, etc.) may result in the information in the operating instructions no longer being completely accurate or sufficient.

When making modifications or performing repair work to components affecting the safety of the product, the product may not be put back into operation until it has been examined and released by a HYDAC representative.

Please notify us immediately of any modifications made to the product whether by you or a third party.

Warranty

For the warranty provided by us, please refer to the General Conditions of Sale and Delivery of HYDAC Filtertechnik GmbH.

They are available at: www.hydac.com ⇨ AGB

Using the documentation

Please note that the method described above of locating specific information does not release you from your responsibility for carefully reading the entire manual prior to starting the unit up for the first time and carefully rereading the manual at regular intervals later on.

WHAT do you want to know?

I determine which topic I am looking for.

WHERE can I find the information I'm looking for?

The document has a table of contents at the beginning. I select the chapter I'm looking for and the corresponding page number.

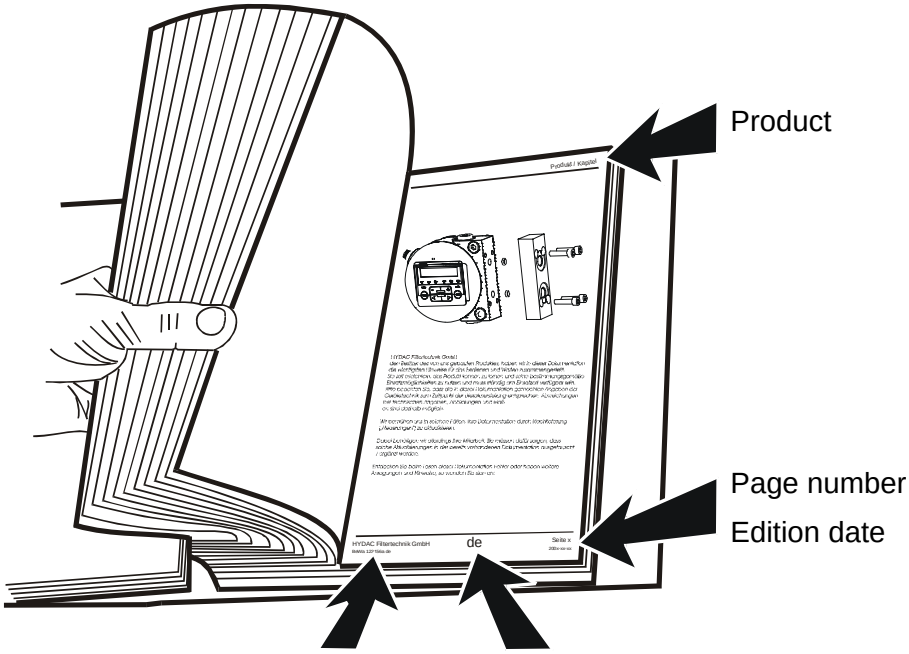

The documentation number with its index enables you to order another copy of the operating and maintenance instructions. The index is incremented every time the manual is revised or changed.

1 Safety information and instructions

1.1 Explanation of Symbols and Warnings

The following designations and symbols are used in this operating manual to indicate danger:

1.2 Abbreviations and symbols

The following symbols are used in this Operating instruction to designate instructions of particular importance:

	This symbol denotes safety precautions, the non-observance of which can endanger persons and the environment.
	This symbol denotes safety precautions, the non-observance of which can endanger persons by electrical voltage.
	This symbol marks an important note for the proper use of the unit. The non-observance of these notes can lead to damage or failures of the unit.
	This symbol is followed by user tips and particularly useful information.

1.3 Please observe the instructions in this manual

A knowledge of the basic safety instructions and safety regulations is a pre-requisite for safe handling and correct operation of the OF5 mini.

This manual contains important instructions for a safe handling of the OF5 mini.

Additionally, all local accident prevention instructions and regulations must be observed.

1.4 Dangers

The Filter OF5 mini is designed to comply with latest technological and safety standards. Nevertheless its usage can pose danger to the user or third persons. In addition the OF5 mini may be damaged by transport or by improper handling. The filter must only be used:

- for the specified correct usage.
- only when in a safe, perfect condition

Faults which could affect safety must be rectified immediately.

1.5 Informal Safety Precautions

Keep this manual near the OLF5 mini.

In addition to the manual, the general and local regulations on accident prevention, the environment, and conservation should be observed and available for reference.

Ensure that the notes concerning safety precautions and sources of danger on the OF5 mini are always legible.

1.6 Electrical Hazards

WARNING

Electric shock

- Pull the power plug before performing work on live parts
- In case of emergency, press the emergency off on the hydraulic system, immediately!

All work on the electrical equipment of the OF5 mini may only be carried out by a qualified electrician.

Check the electrical equipment of the filtration unit regularly. Any loose electrical connections or damaged cables are to be replaced immediately.

1.7 Maintenance and Servicing

All safety installations must be in place and fully functional before starting up the system.

1.8 Structural Alterations

Do not carry out any alterations, conversions or additions to the OF5 mini without the written consent of HYDAC Filtertechnik GmbH.

No modifications may be made to the components without the express prior written approval of **HYDAC Filtertechnik GmbH**.

Defective parts must be replaced immediately with original spare parts.

Only use original replacement parts. When using non-OEM components, it cannot be ensured that they have been designed and manufactured so as to comply with loading and safety requirements. Please compare: "Maintenance"

2 Transport and packing

- All CM-W-...-ET units are tested at the factory for leaks and function. They are then carefully packaged for shipment.
- Upon receipt of the unit, check for any damage from transportation.
- The fluid connections are all sealed with plugs to prevent the intrusion of contaminants during transport. Remove them before commencing installation.
- The packaging material should be re-used/re-cycled as appropriate for your area.

3 Delivery

The following items are supplied:

1. CM-W-...-ET,
2. serial PC cable,
3. this operating and maintenance instructions.
4. Operating- and maintenance instruction Contamination Sensor CS2000
5. Circuit diagram
6. Contamination Control Software CoCoS light

4 Description of the unit

The Hydac CM-W-...-ET are mobile units for continuous monitoring of fluids with high air contents including a suitable fluid conditioning.

4.1 Suitable fluids

We recommend using the CM-W-...-ET only with mineral oil and fluids based on mineral oils.
Please contact us if you want to use other fluids.

Never use water, aggressive liquids, acids or solvent. An only short-time use of such liquids will inevitably damage the pump.

5 Construction

The CM-W-...-ET hydraulic scheme is shown in **Fig. 1**

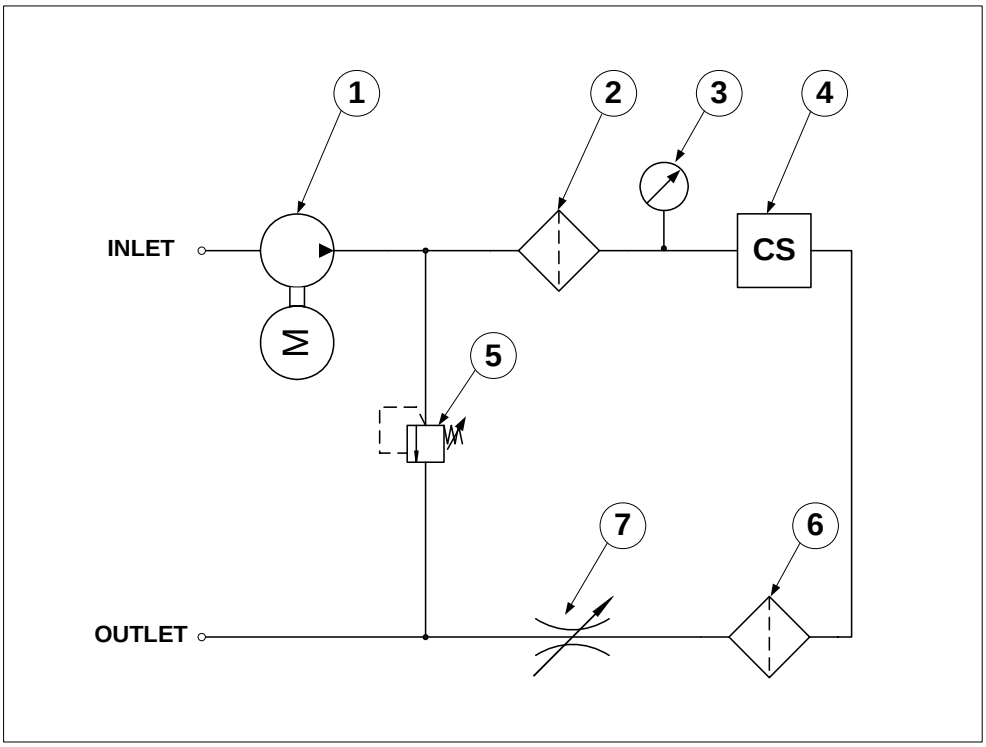

Fig. 1

List of hydraulic components :

①	Pump
②	Filter (200µm) with clogging indicator
③	Pressure gauge
④	Contamination Sensor
⑤	Pressure relieve valve
⑥	Filter (5µm) with clogging indicator
⑦	Flow control valve

These components are also shown in **Fig. 2, Fig. 3** and **Fig. 4**

The Pump (1) is feeding the fluid to be analysed through the Contamination Sensor (4).

The pressure at the CS Inlet may be adjusted between 0,5 and 30 bar using the pressure relieve valve (5). The pressure is indicated on the pressure gauge (3).

The 200 µm filter prevents the Contamination Sensor from clogging due to very large particles.

After setting the inlet pressure the flow rate can be adjusted using the flow control valve (7) which is protected by the 5µm filter (2).

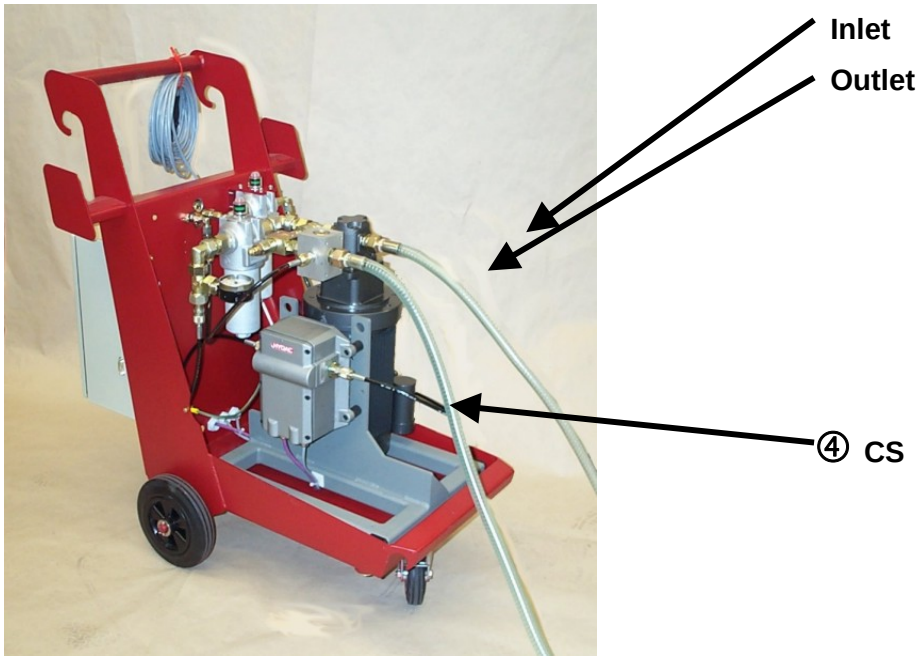

Fig. 2

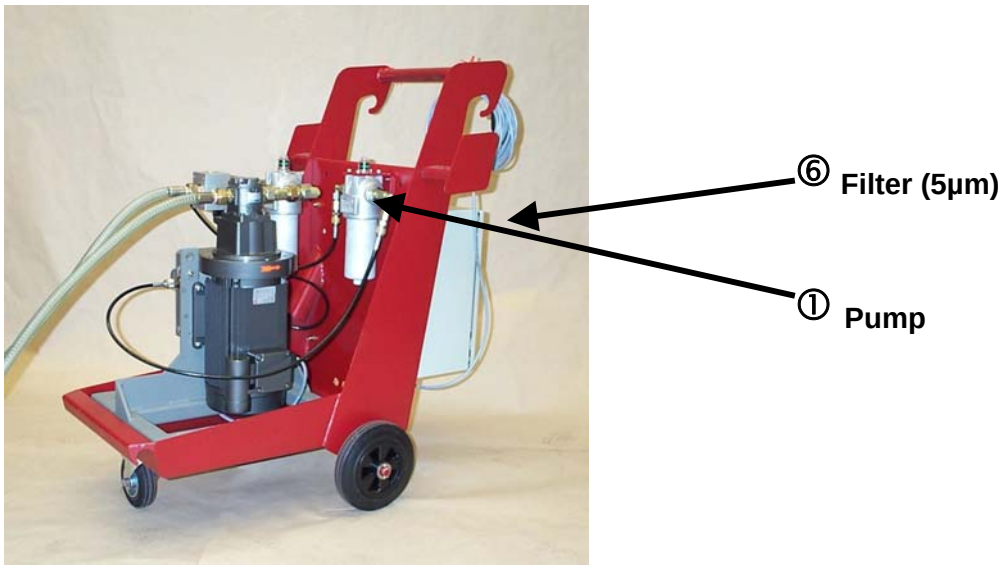

Fig. 3

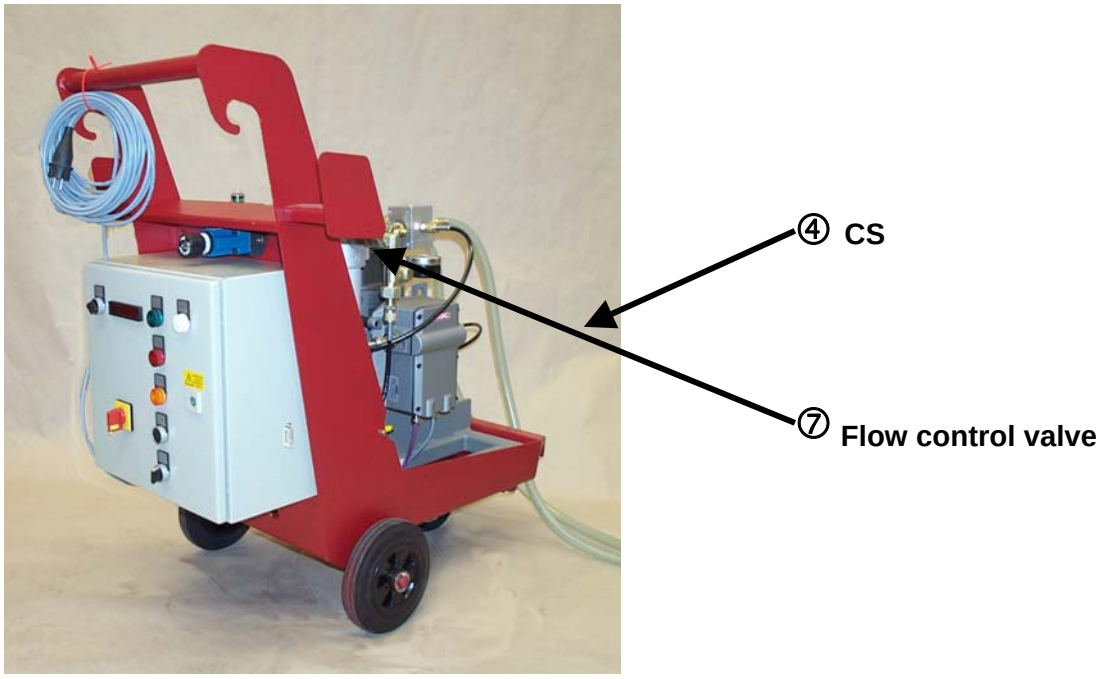
④ CS
⑦ Flow control valve

Fig. 4

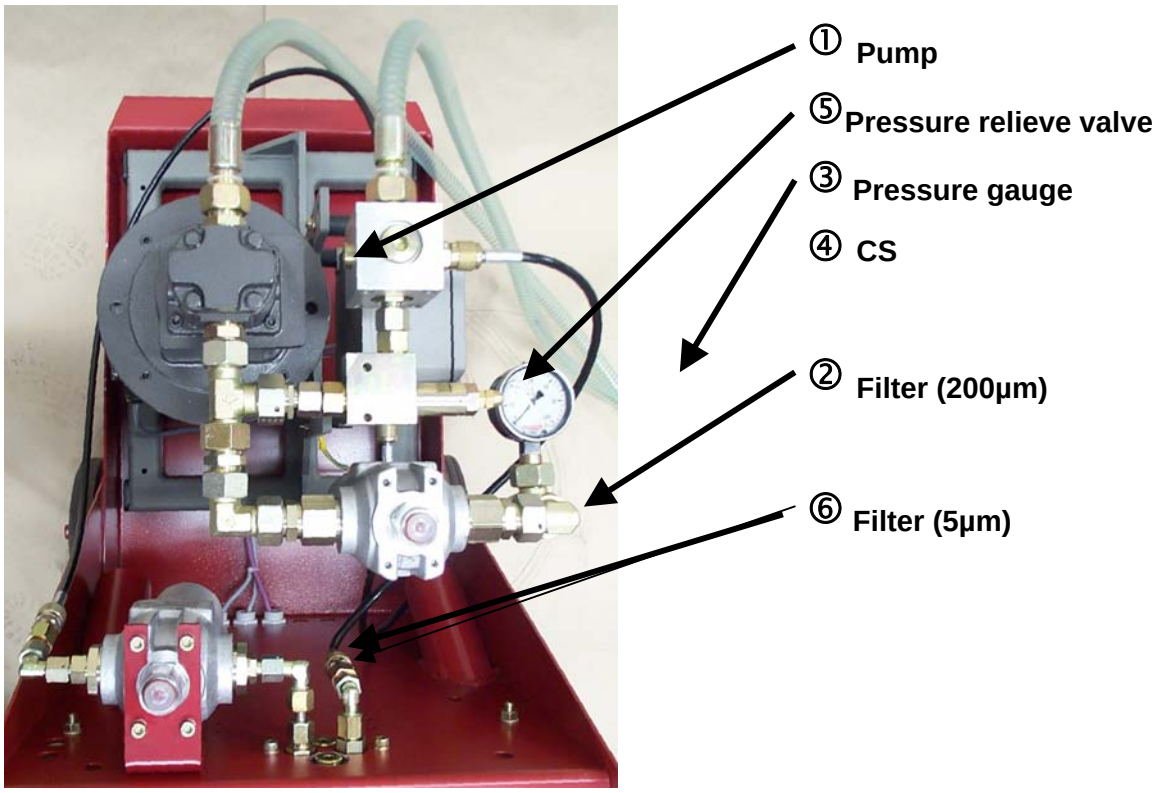
① Pump
⑤ Pressure relieve valve
③ Pressure gauge
④ CS
② Filter (200µm)
⑥ Filter (5µm)

Fig. 5

6 Connections

6.1 Inlet port connection

Insert the suction hose into the fluid to be analysed or remove the suction hose and connect CM-W-...-ET using the G 1/2” thread

The pressure at the Inlet port must be in the range of –0,4 ...2,0 bar.

If large contaminant particles are present, i.e. weld spatter, an appropriate strainer must be installed in the suction line to protect the pump.

6.2 Outlet port connection

The outlet port may also be connected using the supplied hose or the G 1/2" thread.

6.3 Electrical Connection

The electrical connection must be carried out by a qualified person. All local and national electrical regulations and codes must be adhered to. If any electrical or electromagnetic disturbances are likely in the supply system, please inform the manufacturer.

- The voltage and frequency given on the type plate, must agree with that of the power supply.

7 Start up

After complete installation of the unit it can be put into operation:

7.1 Operator control and display elements

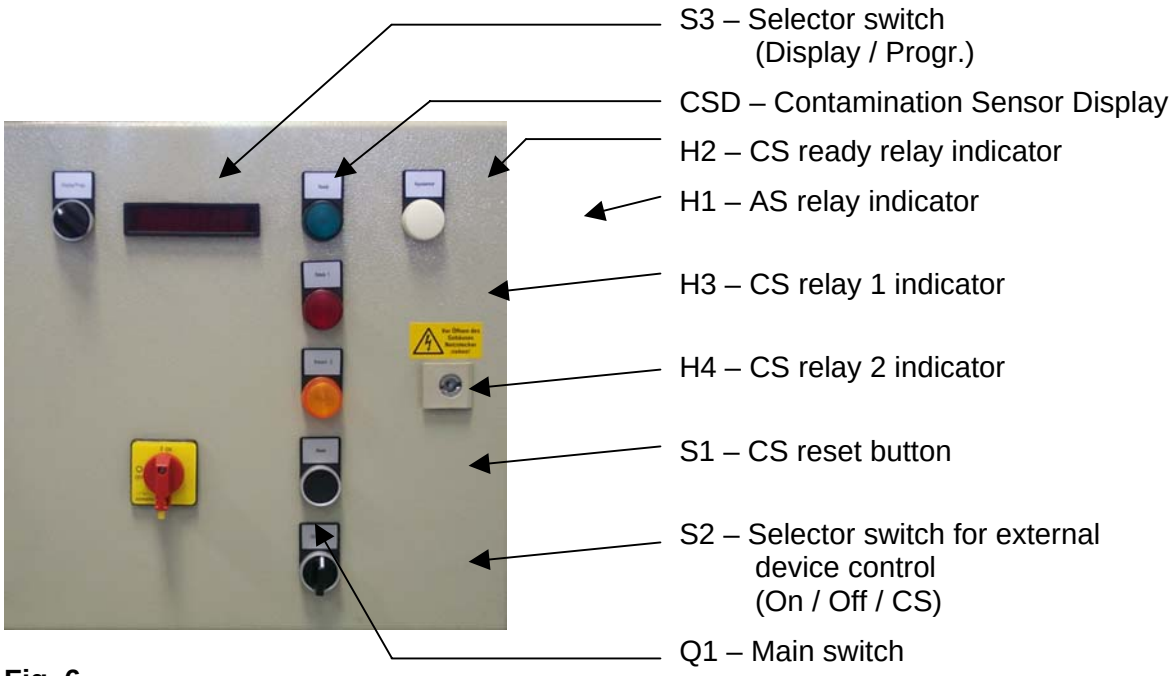

Fig. 6

- The **Main switch (Q1)** is used to switch on or off the complete CM-W-...-ET unit.
- As long as the **CS reset button (S1)** is pushed the CS is disconnected from the power supply.
  Application : When CS is operated in Mode M3 “Filter to” and the target cleanliness level has been achieved, CS stops measuring and the controlled device (the pump) is switched off (refer to CS manual for details). Pushing S1 will restart CS and initiate a new “Filter to”-cycle.
- Using the **selector switch (S2)** you may determine whether the pump is switched on (left position), off (middle position) or controlled by CS relay 1 (right position).
- The RS232 display interface of the CS is used to display measuring results and to configure CS parameter settings (refer to CS manual for details). With the **selector switch (S3)** in the left position measuring results are displayed on the Contamination Sensor Display **CSD** – in the right position CS can be connected to a PC using the 15 pin male D-SUB connector (lower right corner inside electrical-control cabinet, see **Fig. 7**) and the serial PC cable
- The **AS relay indicator (H1)** is illuminated if the water saturation level detected by an optional AS 2330 falls below the low threshold level 1 /refer to AS manual for details)

- The **CS ready relay indicator (H2)** is illuminated if the CS hardware is properly working (this signal is not affected by flow rate errors)
- The **CS relay 1 indicator (H3)** is illuminated if relay 1 is switched on
- The **CS relay 2 indicator (H4)** is illuminated if relay 2 is switched on

Fig. 7

7.2 Operating CM-W

Step-by-step :

- Establish hydraulic and electrical connections
- Put selector switch S2 for external device control to “Off” position
- Put selector switch S3 to “Prog.” Position
- Connect a PC to D-SUB connector for CS parametrization shown in **Fig. 7**

This interface cannot be used for communication with CoCoS software. (refer to chapter 8 Displaying and recording data on a PC with CoCoS)

- Start a terminal software (refer to CS manual for terminal software settings) on your PC
- Switch on Main switch Q1
- If the terminal software now shows *Hy0AC* the connection is established
- After a few seconds CS ready relay indicator H2 should be illuminated.

- After CS measuring interval time elapsed (typically 60 s, refer to CS manual for details) the terminal should display *“F 0”* (Flow rate error : 0 ml/min)
- Put selector switch S2 for external device control to “ON” position now.
- Fluid is fed through CS now
- After another CS measuring interval time elapsed a flow rate error or ISO code or SAE code will be displayed
- Enter parameter mode (return key / “p” / return key)
- Set measuring interval to 10 s (t / return key / “1”/ “0” / return key)

Flow rate can be adjusted easier with this setting since changes will be indicated quicker. This measuring interval setting is not stored to CS EEPROM which means that after a reset of the device the last valid (20 .. 120 s) measuring interval setting is restored.

- Select menu item “Flow check” (“f” / return key)

After expiry of a measuring interval four values will be displayed. These values represent the flow rates which are calculated using the “average time of flight through the light beam” of the particles for the four different particle size channels. These values are only used to check the flow rate. They do not affect the measuring results.

- Set flow rate to about 100 ml/min using flow control valve (7)

If the first or the first two values are significantly smaller than the others it’s an indication for the presence of air bubbles in the fluid.

Increase the inlet pressure using the pressure relieve valve (5) and readjust the flow flow rate.

- Select the desired measuring mode and check / change settings of this mode, measuring interval and format of rs232 display output. Then return to measuring mode (Contamination Sensor online).
- Put selector switch S3 to “Display” Position
- Push CS reset button S1
  Doing this you ensure that a valid measuring interval is used and that CS is no longer in parameter mode.
- The Contamination Sensor Display at first shows “*HYDAC”* and then the measuring result in the selected format.

8 Displaying and recording data on a PC with CoCoS

Depending on the CM-W-...-ET model code it features a serial interface connector to establish a connection to a PC on which the HYDAC Contamination Control Software CoCoS is running.

This interface is different from the one for CS parametrization !
It cannot be used for communication with a terminal software.

Fig. 8

- Turn off your PC and CM-W-...-ET
- Connect CM-W-...-ET to your PC using the serial PC cable supplied with CM-W
- Switch on CM-W-...-ET and your PC
- Launch CoCoS Software (refer to CoCoS manual for details)

9 Installing or changing the filter elements

Install or change the filter element only when the unit is switched off.

9.1 Tools requiered

Size	Spanner for Filter bowl	Allen key for oil drain plug
LF110	SW 27	SW 10

9.2 Changing the filter element

9.2.1 Removing the element

1. Switch off the unit, release filter of pressure.
2. Unscrew bowl (**Fig. 9**). (Collect fluid in a suitable container and clean or dispose off accordance to environmental regulations).
3. Remove filter element from location spigot (examine surface of element for dirt residue and larger particles, these can indicate damage to the components).
4. Exchange or clean the filter element (only W, W/HC and V-elements can be cleaned).
5. Clean bow.
6. Examine filter, especially surfaces and thread, for mechanical damage.
7. Check o-rings and back-up rings - replace parts if necessary.

Contamination or incomplete pressure release on disassembly can lead seizing of the bowl thread.

9.2.2 Fitting the element

1. Moisten thread and sealing surfaces on the filter bowl and head, as well as the o-ring on the filter bowl and element, with clean operating fluid.
2. When fitting a new element, check that the designation corresponds to that of the old element.
3. Place the filter element carefully onto the element location spigot.
4. Screw in filter bowl.
5. Unscrew Filter bowl by one quarter-turn.
6. Switch on the unit and check filter for leakage.
7. Vent filter at an appropriate place in the system.

Filter elements must be disposed of in accordance to environmental regulations.

Fig. 9

10 Maintenance

10.1 Filter

When the clogging indicator responds (reaching the red marked area), the filter element has to be changed or cleaned immediately.

Nevertheless, we recommend that the filter element is to be changed at least once a year.

The clogging indicators only respond when fluid is flowing through the filter.

If the clogging indicator respond during a cold start only, it is possible that the element does not need to be changed yet.

The pressure clogging indicator only responds when fluid is flowing trough the filter.

For the filter element change see **chapter 9.**

Other than this inspection requirement, the unit is maintenance free.

11 Putting out of operation and disposal

When the CM-W-...-ET is put out of operation or disposed of, all local health and safety regulations and all regulations concerning the protection of the environment have to be observed, in particular for the hydraulic fluid in the CM-W-...-ET and all parts in contact with it.

12 Dimensions

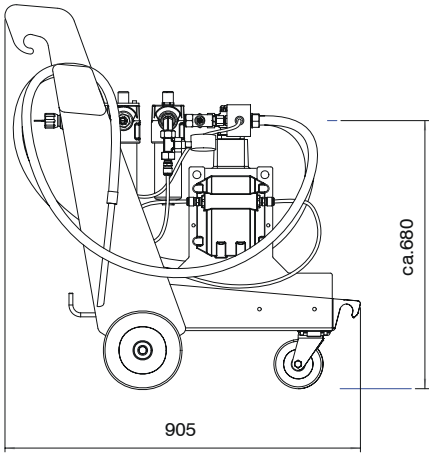

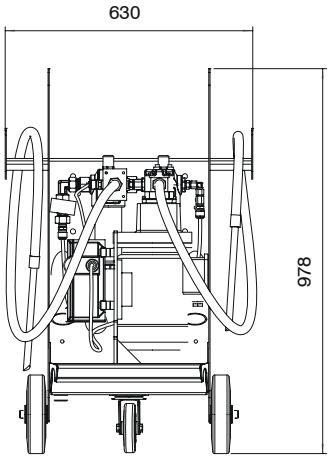

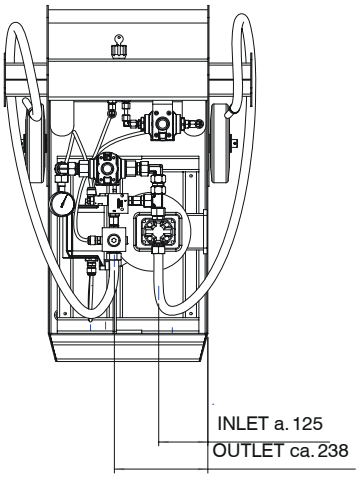

Fig. 10

13 Technical data

Flow rate:	0,9 l/min

Working pressure:	30 bar max.
Type of pump:	Gear pump
Viscosity range:	10-2000 mm^2/s
Fluid temperature:	-10....75°C
Ambient temperature:	-20....60°C
Supply voltage	_____V / __ Hz / ___ Phase (see Typeplate)
Weight:	appr. 110 kg

14 Spares

Filter Elements	
• 5µm: 0110D005DN3HC/-V	1251436
• 200µm: 0110C200W/HC-/-V	1265443