HYDAC INTERNATIONAL

Air Cooler Mobile
OK-ELH 2-7
with hydraulic motor

Symbol

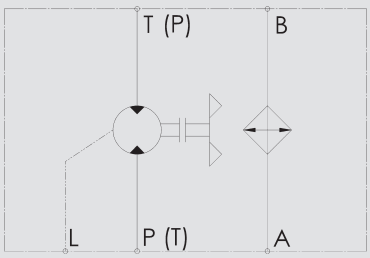

General

The OK-ELH air cooler series is designed specifically for mobile hydraulic applications where high performance and efficiency are required and physical size is minimized to allow easy installation.

Product Features

These coolers use a combination of high performance cooling elements and hydraulic motors to give long trouble free operation in arduous mobile hydraulic applications.

- Compact, efficient, high performance
- Cooling range 4 - 55 kW
- Hydraulic Motors from 6.3 to 22 cm³/r

Application Field

For transmission cooling and hydraulic systems in all mobile machines and vehicles, such as

- Mobile cranes
- Concrete mixers and pump trucks
- Road paving machines
- Construction machines (excavators, wheel loaders)
- Agricultural machines
- Municipal machines

Operation Data

Fluids	● Oils (mineral oils, synthetic oils, high viscosity oils, biological oils, phosphate ester) ● Water-glycol (cooling fluids)
Viscosity	2,000 mm²/s (standard)
Temperature range	● Minimum / maximum ambient temperature: -20 °C bis +40 °C (standard) ● Minimum / maximum temperature of the medium: +20 °C to +130 °C Please contact the technical sales department in the event of deviating temperatures. **Notice!** Fan at max. speed (max. volume of air) must be avoided when operating a cooler at which the temperature difference between the medium inlet at the cooler and the ambient temperature can be greater than 50 °C. Quick changes in the temperature of the cooling element material can lead to a significant reduction in service life or to direct damage of the cooling element due to thermal shock. Please contact the technical sales department to receive information about controlled fan drives.
Pressure resistance of the cooling element	● Dynamic operating pressure: 16 bar ● Static operating pressure: 21 bar
Fan	Axial fan in suction version (standard) Axial fan in pushing version on request (note: approx. 10 % less cooling capacity)
Motor*	● Hydraulic motor reversible with drain port ● max. outlet side pressure: 120 bar ● max. drain pressure: 2 bar ● max. peak pressure: 6.3/14 cm³/U = 300 bar, 22 cm³/U = 200 bar ● Operating fluid: Mineral oil to DIN 51524/25 DIN 51511 Fluid viscosity range: 10 - 600 mm²/s (recommended 30 - 45 mm²/s) Fluid temperature range: up to 90 °C Filtration : ISO/DIS 4406, Code 19/16, $\beta_{25} > 75$
Noise levels	See technical data The noise levels are only reference values as the acoustic properties of a room, connections and reflection have an effect on the noise level.
Accessories	● Integrated pressure bypass valve (IBP) or integrated thermal pressure bypass valve (IBT) (cannot be retrofitted, also see options) ● Thermostats ● Air filter grid or air filter mat ● Vibration damper

* The motor oil flow Q can be calculated at nominal motor oil operating pressure as follows:

$$Q = \frac{V_g \times n}{10^3 \times \eta_{vol}} \text{ [l/min]}$$

V_g = motor displacement [cm³/U]
n = fan speed [rpm]
η_{vol} = volumetric efficiency = 90 % at motor oil operating pressure of 150 bar

(Calculation also in simulation software “KULI” possible)

Options

Integrated pressure bypass valve (IBP) / Integrated thermal pressure bypass valve (IBT)
The bypass channel is integrated in the cooling element. If a particular pressure is exceeded, the IBP opens the bypass channel, thereby protecting the cooling element from too high a pressure. Furthermore, the IBT only opens the cooling element path once a particular temperature has been reached.

ATEX
The OK-ELH is also available for operation in gas and dust explosive areas.

Corrosion protection CPL
The CPL version (corrosion protection level) is for aggressive ambient conditions, such as industrial atmospheres, high humidity or high salt content, which place great demands on the corrosion resistance and robustness of the materials used.

Thermal bypass Hydraulic motor / variable speed
The thermo valve is a pre-controlled pressure valve with temperature-dependent pressure control and is mounted on the hydraulic motor in place of the existing cover plate.

The pressure setting of the valve automatically changes dependent on the temperature and thus controls the motor speed. In addition to the actual temperature-controlled pressure setting, a mechanical maximum pressure control and a recharging valve are fitted as a non-return valve.

The switching temperature values can be set from 40 to 70 °C and the pressure can be controlled up to 100 °C: please contact our sales for the dimensioning of the thermo-bypass.

All the standard hydraulic motors can be used with the thermo-bypass. The minimum oil pressure at which the thermo control starts to work is 8 bar, i.e. a maximum residual power consumption corresponding to 8 bars is to be foreseen also in by-pass phase.

Dimension

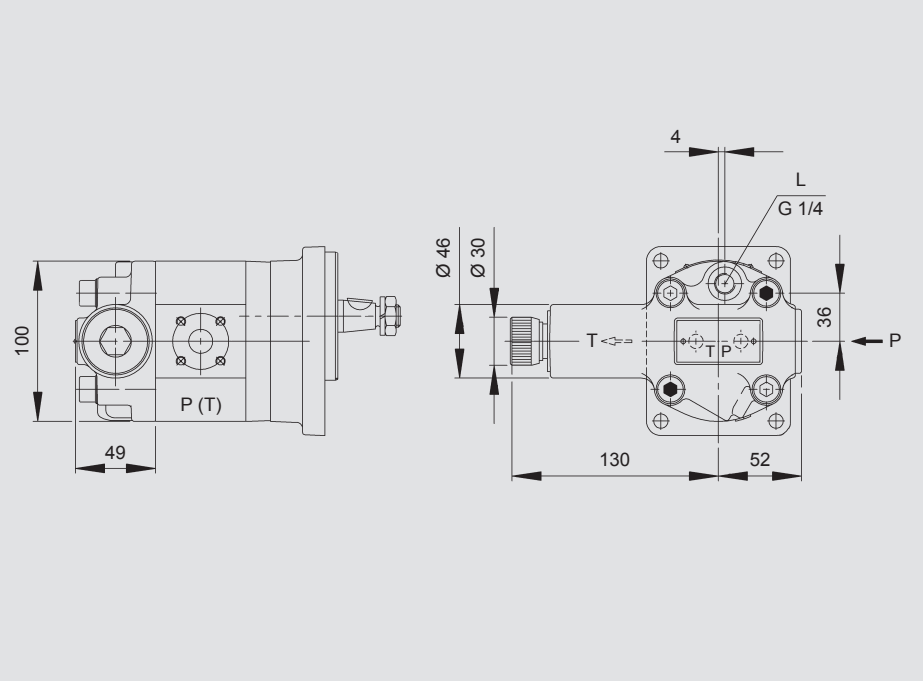

Symbol Thermal bypass

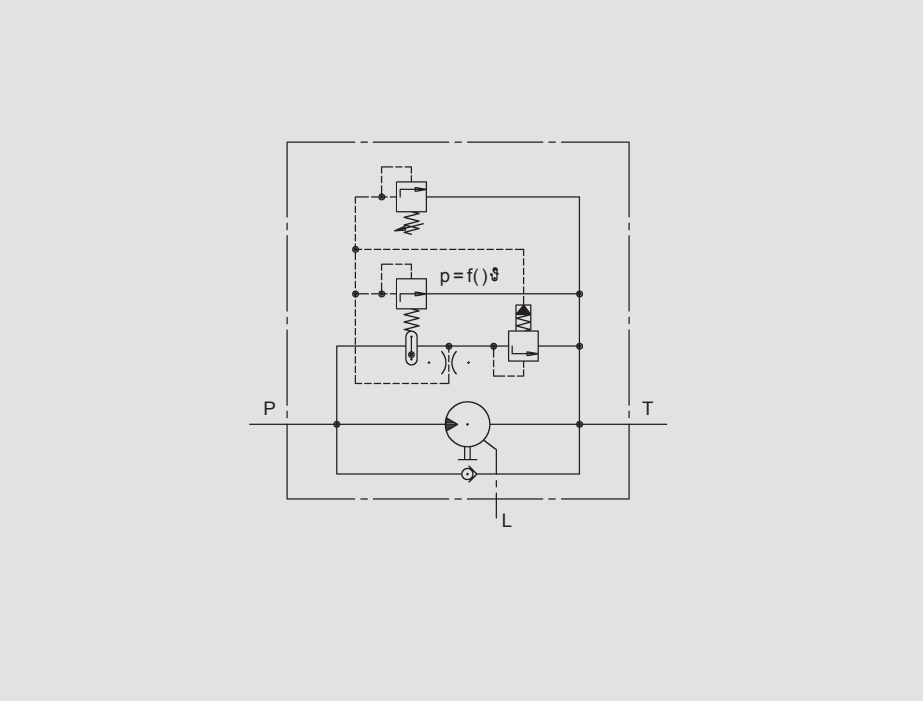

Design

OK-ELH 2-4

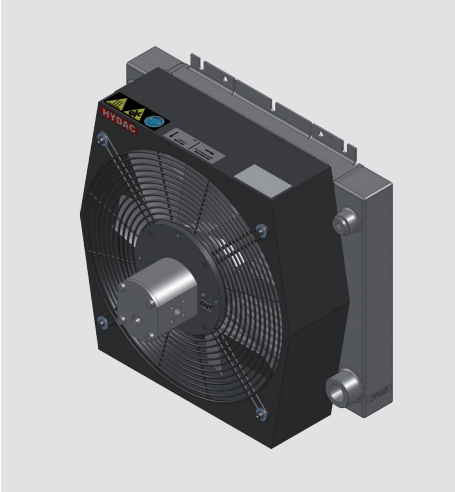

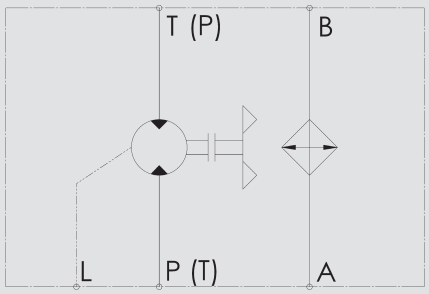

Air cooler with

1. Hydraulic motor
2. Finger grid
3. Fan housing
4. Axial fan
5. Heat exchanger

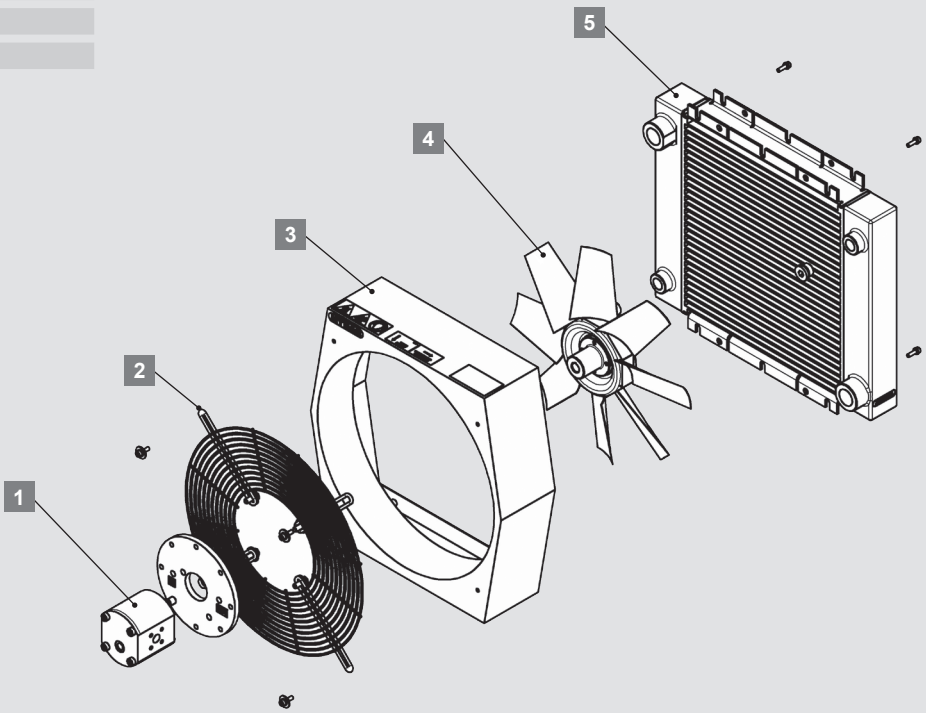

Design

OK-ELH 5

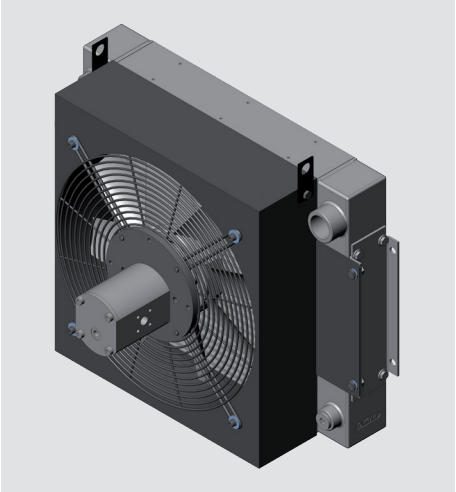

OK-ELH 6

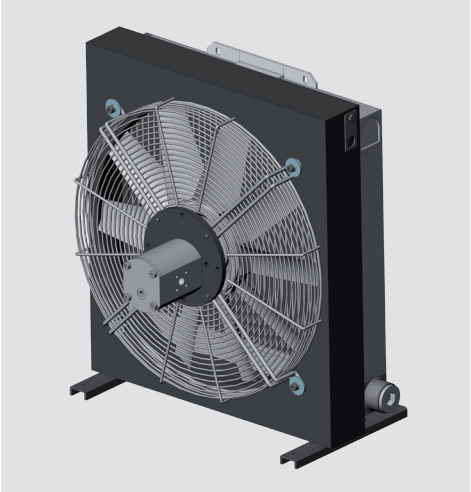

OK-ELH 7

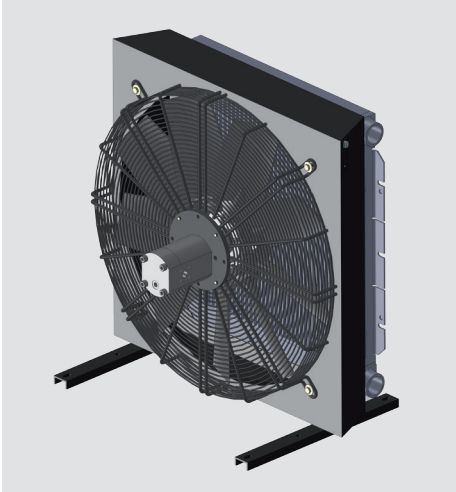

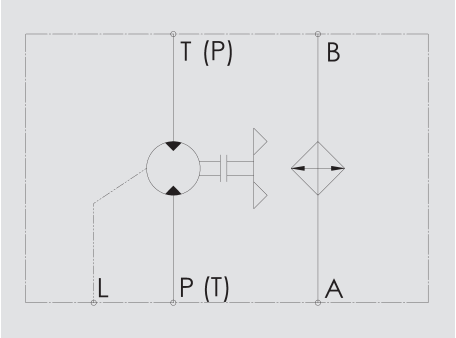

OK-ELH 5

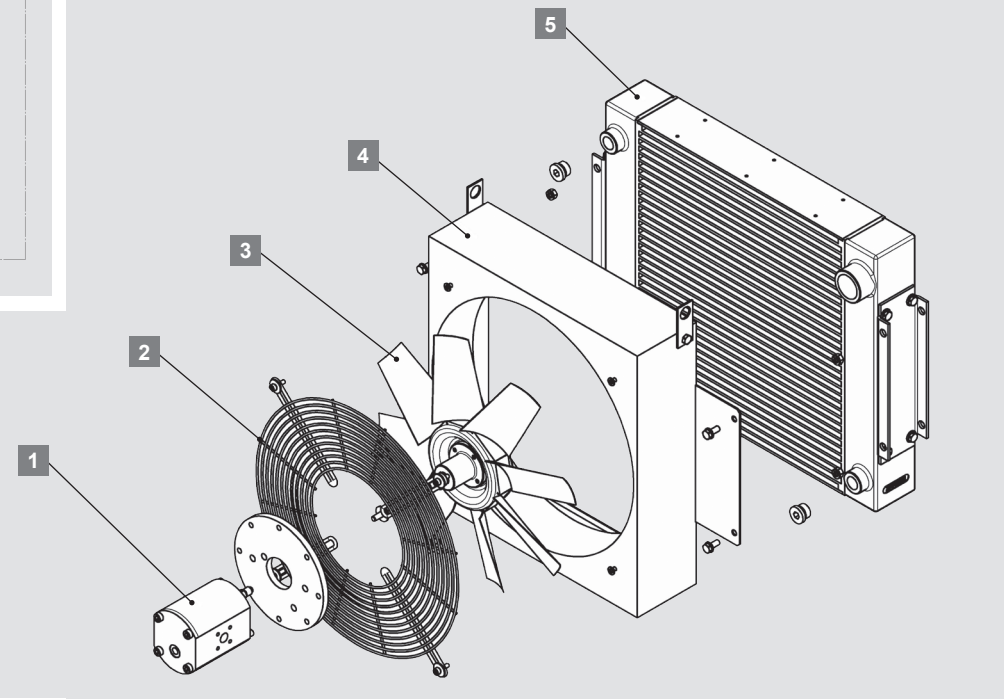

Air cooler with

1	Hydraulic motor
2	Finger grid
3	Axial fan
4	Fan housing
5	Heat exchanger

OK-ELH 6-7

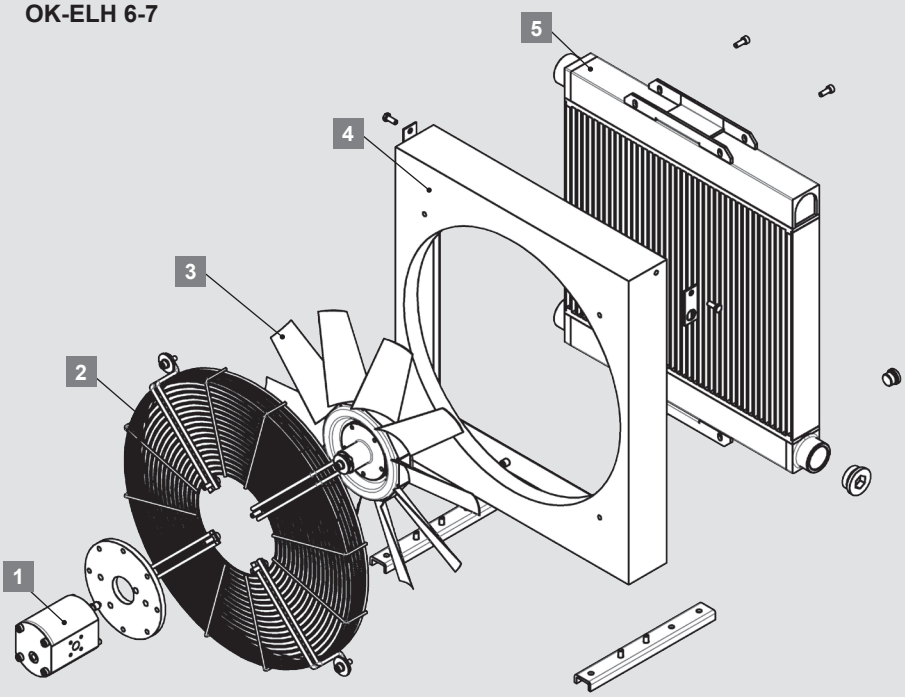

Air cooler with

1	Hydraulic motor
2	Finger grid
3	Axial fan
4	Fan housing
5	Heat exchanger

Technical Data

OK-ELH 2-7

Type of cooler	P/N	Motor displacement [cm3/r]	Operating speed range [rpm]	Fluid flow [l/min] [1]	Air flow [m³/h] [1]	Continuous motor operating pressure [bar]	Required pressure for max. speed [bar] [2]	Motor oil flow at 1,500 rpm [l/min]	Noise level at 1,000 rpm [dB(A)] (at 1 m distance)	Volume [l] [3]	Weight [kg] [4]
OK-ELH 2	3118399	6.3	1,500 - 3,000	180	420	250	20	10.5	69	2.0	11
OK-ELH 2	3118400	14.0	1,500 - 3,000	180	420	250	20	23.0	69	2.0	11
OK-ELH 3	3103131	6.3	1,500 - 3,000	250	740	250	20	10.5	69	2.2	13
OK-ELH 3	3103134	14.0	1,500 - 3,000	250	740	250	20	23.0	69	2.2	13
OK-ELH 3	3103523	22.0	1,500 - 3,000	250	740	150	20	36.6	69	2.2	13
OK-ELH 4	3106813	6.3	1,500 - 3,000	250	1,500	250	50	10.5	70	3.0	18
OK-ELH 4	3106816	14.0	1,500 - 3,000	250	1,500	250	30	23.0	70	3.0	18
OK-ELH 4	3106817	22.0	1,500 - 3,000	250	1,500	150	20	36.6	70	3.0	18
OK-ELH 5	3098892	6.3	1,500 - 3,000	250	1,700	250	70	10.5	70	5.2	24
OK-ELH 5	3103135	14.0	1,500 - 3,000	250	1,700	250	30	23.0	70	5.2	24
OK-ELH 5	3107149	22.0	1,500 - 3,000	250	1,700	150	20	36.6	70	5.2	24
OK-ELH 6	3128565	6.3	1,000 - 3,000	250	3,300	250	150	10.5	72	4.6	43
OK-ELH 6	3128566	14.0	1,000 - 3,000	250	3,300	250	70	23.0	72	4.6	43
OK-ELH 6	3128567	22.0	1,000 - 3,000	250	3,300	150	50	36.6	72	4.6	43
OK-ELH 7	3189345	14.0	1,000 - 2,000	250	7,800	250	220	23.0	77	5.2	50
OK-ELH 7	3189359	22.0	1,000 - 2,000	250	7,800	150	140	36.6	77	5.2	50

[1] Max. flow rate at 1,500 1/min
[2] at 34 mm²/s
[4] Fluid in cooling element
[3] Unfilled

Cooling Capacity and Pressure Difference Δp

OK-ELH 2-7

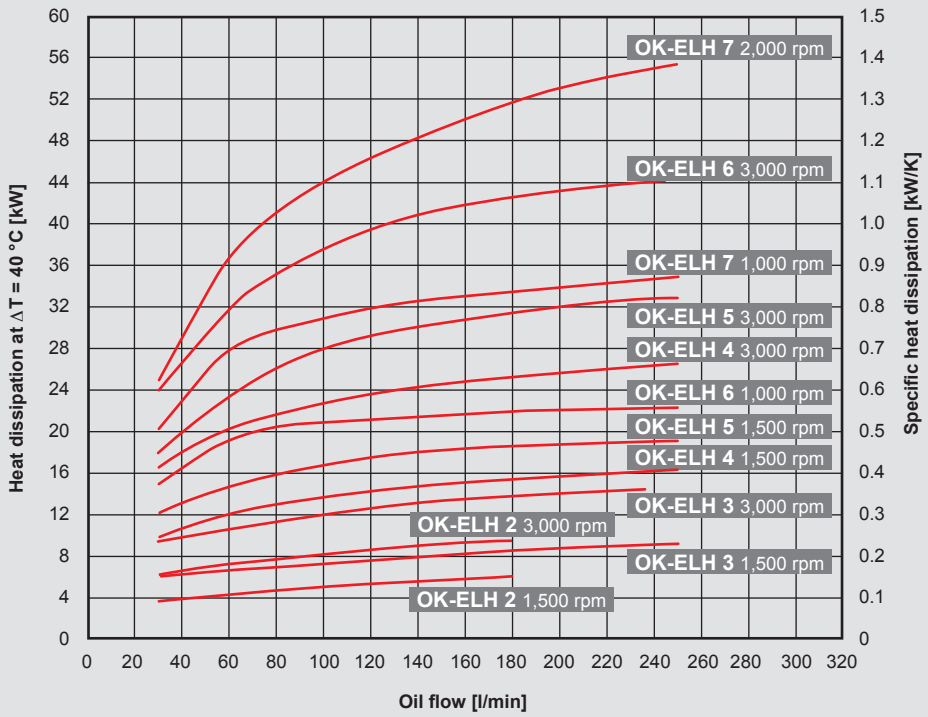

Tolerance: ±5 %

Cooling capacity:
Dependent on the oil flow rate and the temperature difference ΔT between oil inlet and air inlet.

Note:
The values are measured at ΔT = 40 °C. For smaller ΔT values, the values can change. You can also use our cooler calculation software for designing. Please contact our technical sales department.

Pressure difference Δp

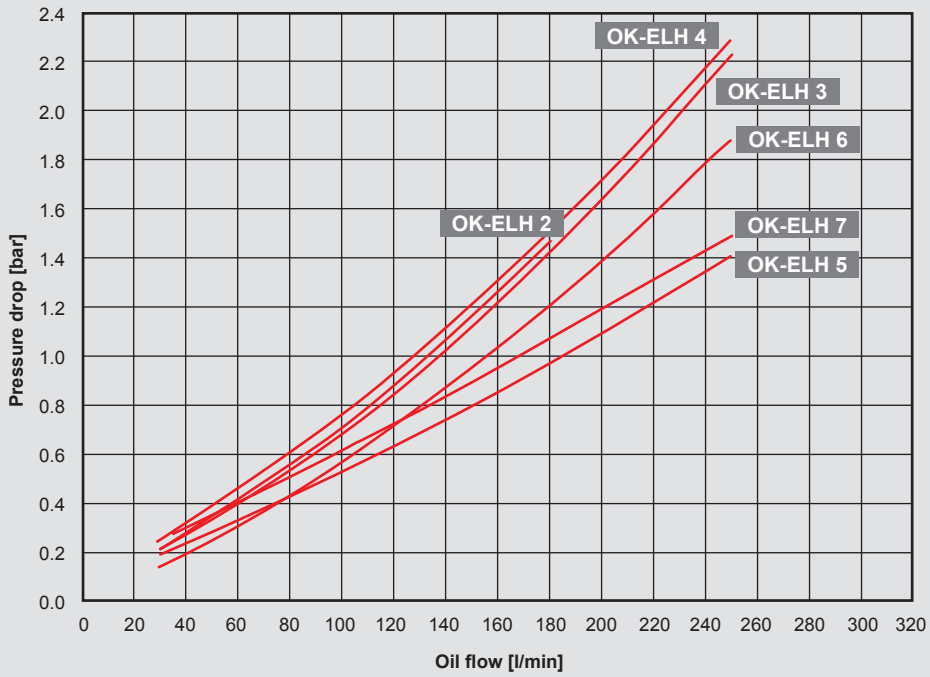

measured at 30 mm²/s
Tolerance: ±5 %

For other viscosities, the pressure loss must be multiplied by the conversion factor K:

Viscosity (mm²/s)	10	15	22	30	46	68	100	150
Factor K	0.35	0.5	0.75	1.0	1.4	1.9	2.5	3.5

Model Type

OK-ELH - 2 - 1.0 - H6.3TB - 1 - S - AITF60

Cooler type
OK-ELH = Oil-Air cooler

Size
2-7 = Size

Revision

Motor displacement
H6.3 = 6.3 cm^3/r
H14 = 14 cm^3/r
H22 = 22 cm^3/r
H..TB = hydraulic motor with thermal bypass

Color

1 = RAL 9005 (standard)
Other colors on request.

Air flow direction
S = Suction (standard)
D = Blowing (on request)

Accessories
IBP = Heat exchanger with integrated bypass valve
IBT = Heat exchanger with integrated thermo-bypass valve
AITF = Thermostat (fixed)
FU = Feet
For all possible accessories, like vibration absorber, air filter grid or air filter mat please refer to brochure Accessories for air coolers.

Dimensions

OK-ELH 2-4

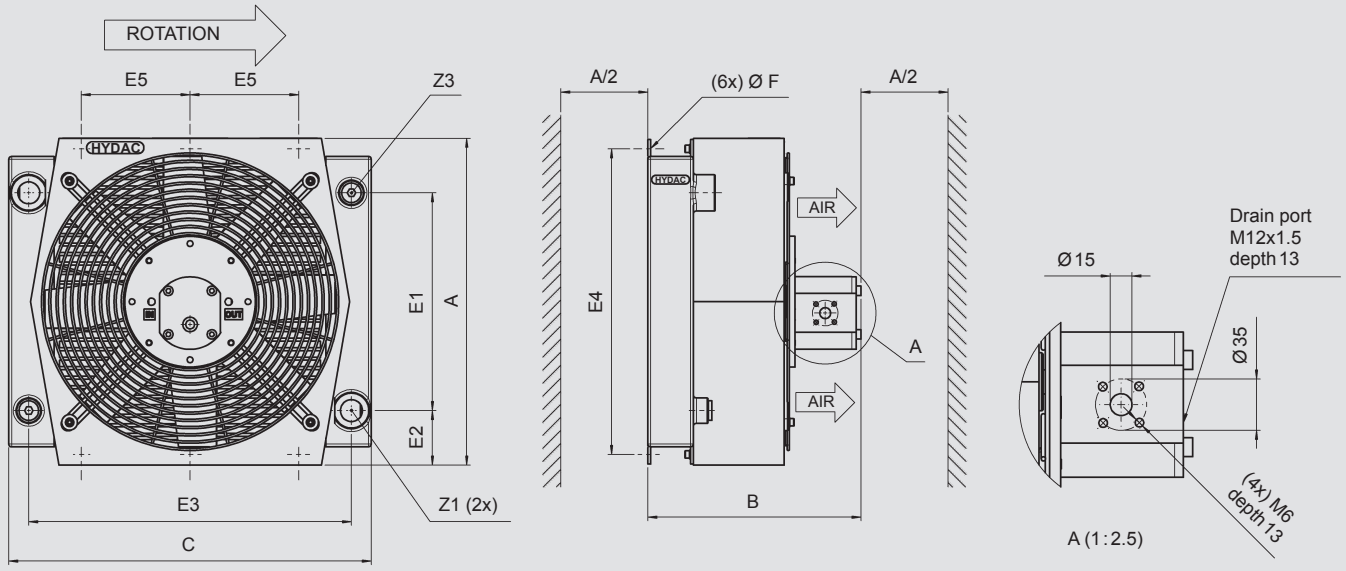

[mm]	A ±5	B ±10 6.3 cc	B ±10 14 cc	B ±10 22 cc	C ±5	E1 ±5	E2 ±5	E3 ±5	E4 ±2	E5 ±2	F ø/slot	Z1	Z3
OK-ELH 2	313	270	283	283	384	199	57	324	288	80	14x10	G1"	M22x1.5
OK-ELH 3	356	279	292	292	420	230	63	370	329	100	14x10	G1"	M22x1.5 [1]
OK-ELH 4	450	294	306	306	500	300	80	445	421	150	19x10	G1"	M22x1.5 [2]

[1] OK-ELH 3 and OK-ELH 4 have two connections M22x1.5.

OK-ELH 5

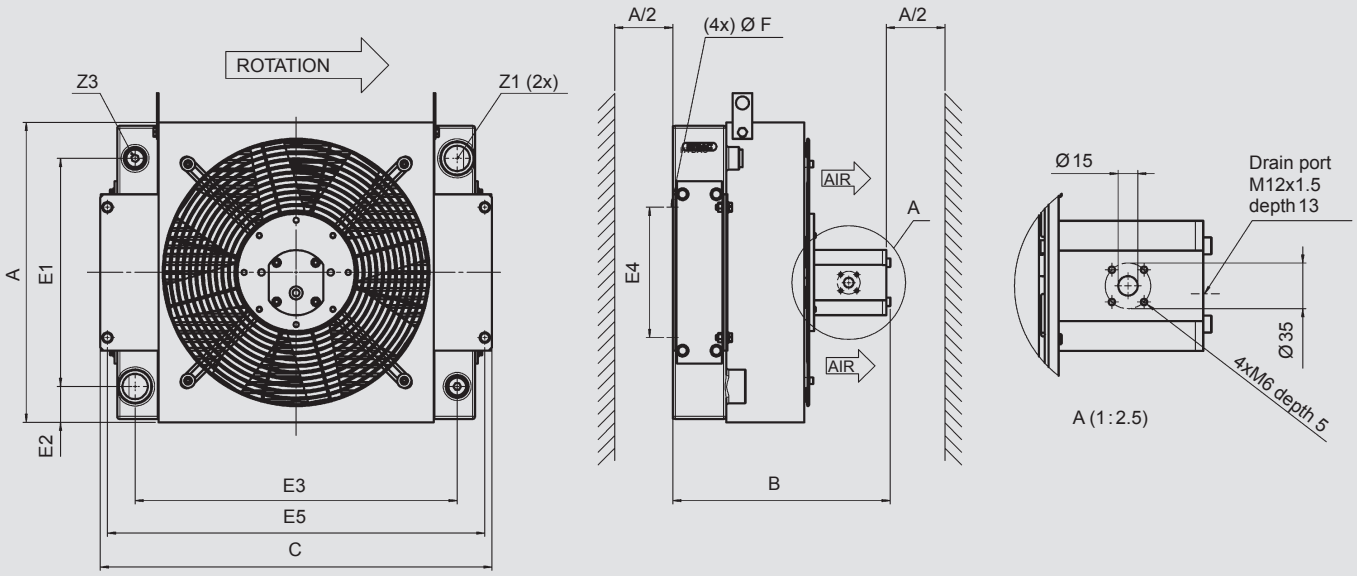

[mm]	A ±5	B ±10 6.3 cc	B ±10 14 cc	B ±10 22 cc	C ±5	E1 ±5	E2 ±5	E3 ±5	E4 ±5	E5 ±5	F ø/slot	Z1	Z3
OK-ELH 5	460	311	323	338	602	350	55	495	200 [2]	580 [2]	12	G1-1/4"	M22x1.5 [2]

[1] The cooling element has two connections M22x1.5.
[2] OK-ELH 5 has the front fixing holes in the lateral sides.

OK-ELH 6

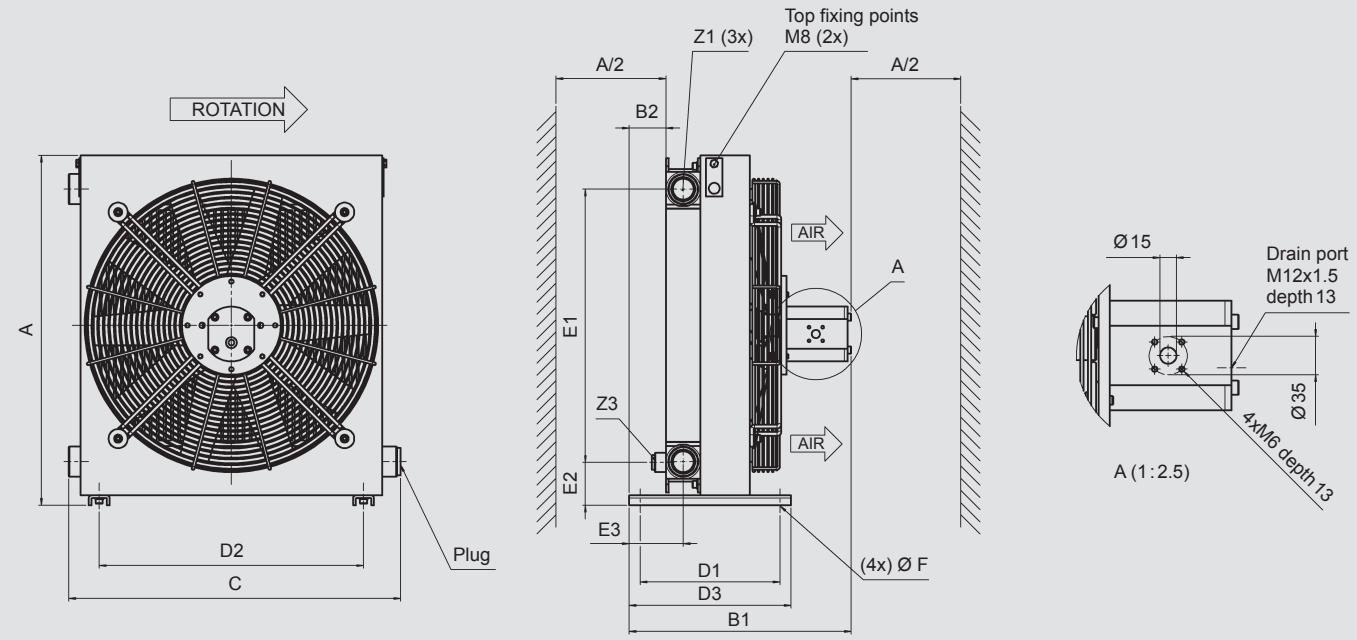

[mm]	A ±5	B1 ±10 6.3 cc	B1 ±10 14 cc	B1 ±10 22 cc	B2 ±5	C ±5	D1 ±2	D2 ±2	D3 ±2	E1 ±5	E2 ±5	E3 ±5	F ø/slot	Z1	Z3
OK-ELH 6	638	378	391	405	67	598	255	482	295	497	80	98	9	G1-1/4"	M22x1.5

OK-ELH 7

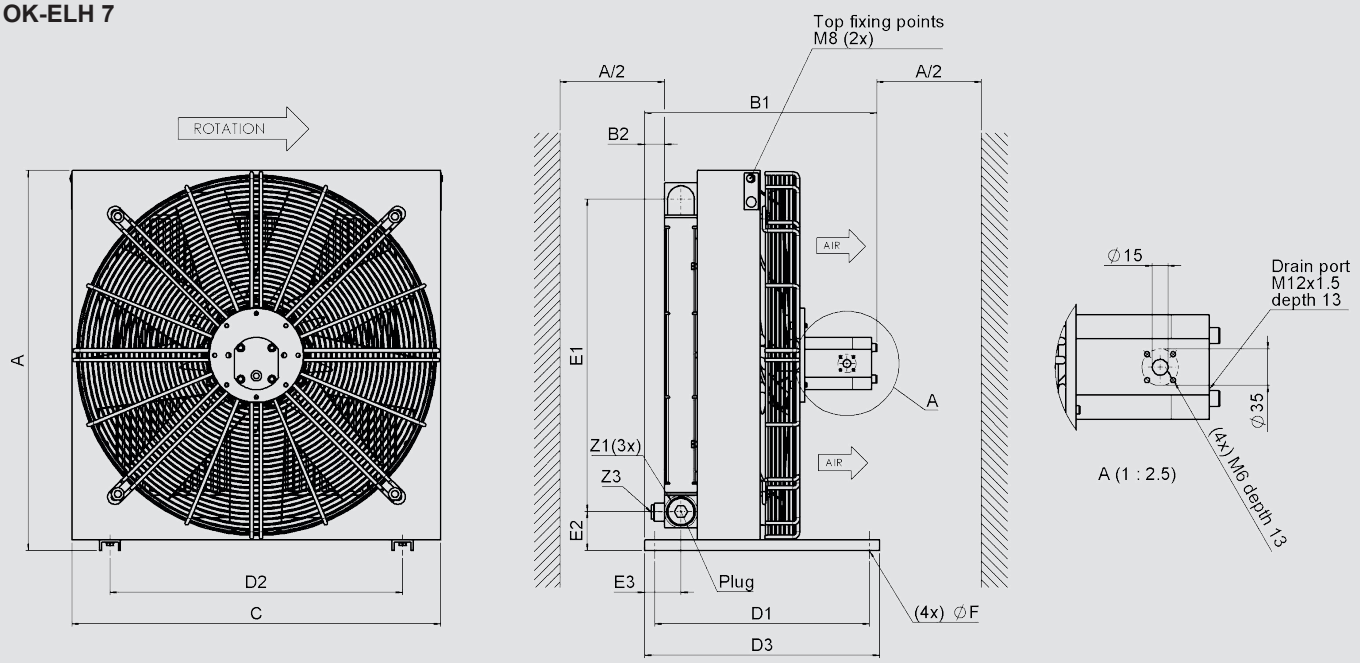

[mm]	A ±5	B1 ±10 6.3 cc	B1 ±10 14 cc	B1 ±10 22 cc	B2 ±5	C ±5	D1 ±2	D2 ±2	D3 ±2	E1 ±5	E2 ±5	E3 ±5	F ø/slot	Z1	Z3
OK-ELH 7	726	–	444	459	42	706	410	560	450	597	75	73	9x20	G1-1/4"	M22x1.5

Note:

We recommend maintaining a minimum distance to ensure an unimpeded air inlet and air outlet.
This is half the height of the cooling element (A/2).
Anything below the minimum distance can influence the cooling capacity and the noise emissions.

Note

The information in this brochure relates to the operating conditions.

For applications and operating conditions not described, please contact the relevant technical department.

Subject to technical modifications.

HYDAC INTERNATIONAL

HYDAC COOLING GMBH

Industriegebiet
66280 Sulzbach/Saar
Germany

Tel.: +49 6897 509-01
Fax: +49 6897 509-454

E-mail: cooling@hydac.com
Internet: www.hydac.com

HYDAC AG
Mezzovico Branch

Via Sceresa, Zona Industriale 3
6805 Mezzovico
Switzerland

Tel.: +41 91 9355-700
Fax: +41 91 9355-701

E-mail: info@hydac.ch
Internet: www.hydac.com

E 5.808.2/08.16