HYDAC INTERNATIONAL

2/2-way piston valve
CXK01 and CXK02

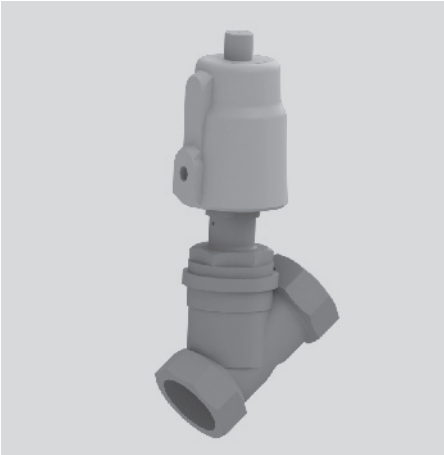

Switching function

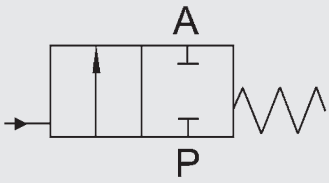

NC (closed when de-energised)

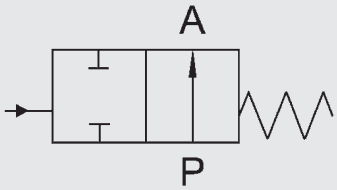

NO (open when de-energised)

Order data

- Nominal size
- Connection
- Function NC/NO
- Operating pressure
- Flow rate
- Medium
- Medium temperature
- Ambient temperature

⚠ If order details or application data are inaccurate or incomplete, there is a risk that the technical configuration of the valves may not be correct for the desired use. This may result in the physical and/or chemical characteristics of the materials or seals used not being adequate for the intended use.

Model code
(also example order)

CXK01	2/2	F	C	3	15	025	012	PP

Designation
CXK01 = series CXK01 - closes with the flow
CXK02 = series CXK02 - closes against the flow

Ways
2/2 = number of ways

Control
F = external pilot

Switching function
C = NC - closed when de-energised
O = NO - open when de-energised

Body material
3 = red bronze
6 = stainless steel

Nominal size
15 = DN 15
20 = DN 20
25 = DN 25
32 = DN 32
40 = DN 40
50 = DN 50

Pressure range (see table)
003 = 0 to 3 bar
⋮ ⋮
025 = 0 to 25 bar

Connection
012 = G½ - DN 15
034 = G¾ - DN 20
100 = G1 - DN 25
114 = G1¼ - DN 32
112 = G1½ - DN 40
200 = G2 - DN 50

Sealing material (spindle/seat)
Red bronze
PP = PTFE / PTFE
Stainless steel
PF = PTFE / FKM

EN 6.175.1/10.19

Technical specifications

Nominal size		DN15 to DN50
Pressure range		PN0 to PN25 (see table)
Body material		Red bronze, stainless steel
Seal material	Red bronze	Seat seal: PTFE Spindle seal: PTFE, optionally NBR
	Stainless steel	Seat seal: FKM, optionally PTFE Spindle seal: PTFE, optionally NBR
Flow rate		0 – approx. 792 l/min
Medium temperature		-10 °C to +80 °C for NBR -40 °C to +200 °C for PTFE
Ambient temperature		max. +60 °C
Connections		G½ - G2
Operating fluid	Media	Aggressive, neutral, gaseous and liquid media, which do not have a negative effect on the physical and chemical properties of the material of the housing or sealing material concerned
	Max. permitted pressure	See table
	Max. permissible viscosity	600 m^2/s
Control medium	Medium	Neutral gases
	Volume	Actuator size 50 mm 0.035 dm^3
		Actuator size 80 mm 0.131 dm^3
Control pressure		4 to 10 bar
Pilot valve		optional 3/2-way pilot valve, with M12x1 connection possible
Mounting position		No orientation restrictions

Series	DN [mm]	Pressure bar – Ø 50	Pressure bar – Ø 80*	Connection	Kv value [m³/h]	Material
CXK01	15	0 – 16	–	G½	4.6	Red bronze
	20	0 – 16	0 – 16	G¾	9.4	
	25	0 – 16	0 – 16	G1	17.4	
	32	0 – 10	0 – 16	G1¼	21.5	
	40	0 – 8	0 – 16	G1½	26.4	
	50	0 – 4	0 – 16	G2	47.5	
CXK01	15	0 – 25	–	G½	4.6	Stainless steel
	20	0 – 20	–	G¾	9.4	
	25	0 – 16	0 – 25	G1	17.4	
	32	0 – 9	0 – 25	G1¼	21.5	
	40	0 – 7	0 – 20	G1½	26.4	
	50	0 – 4	0 – 12	G2	47.5	
CXK02	15	0 – 16	–	G½	4.6	Red bronze
	20	0 – 16	–	G¾	9.4	
	25	0 – 10	0 – 16	G1	17.4	
	32	0 – 7	0 – 12	G1¼	21.5	
	40	0 – 6	0 – 8	G1½	26.4	
	50	0 – 4	0 – 5	G2	47.5	
CXK02	15	0 – 16	–	G½	4.6	Stainless steel
	20	0 – 20	0 – 25	G¾	9.4	
	25	0 – 10	0 – 16	G1	17.4	
	32	0 – 7	0 – 10	G1¼	21.5	
	40	0 – 6	0 – 8	G1½	26.4	
	50	0 – 3	0 – 5	G2	47.5	

*Actuator Ø 80 as option

⚠ The material specifications refer exclusively to the valve connection parts in contact with the medium.

Dimensions

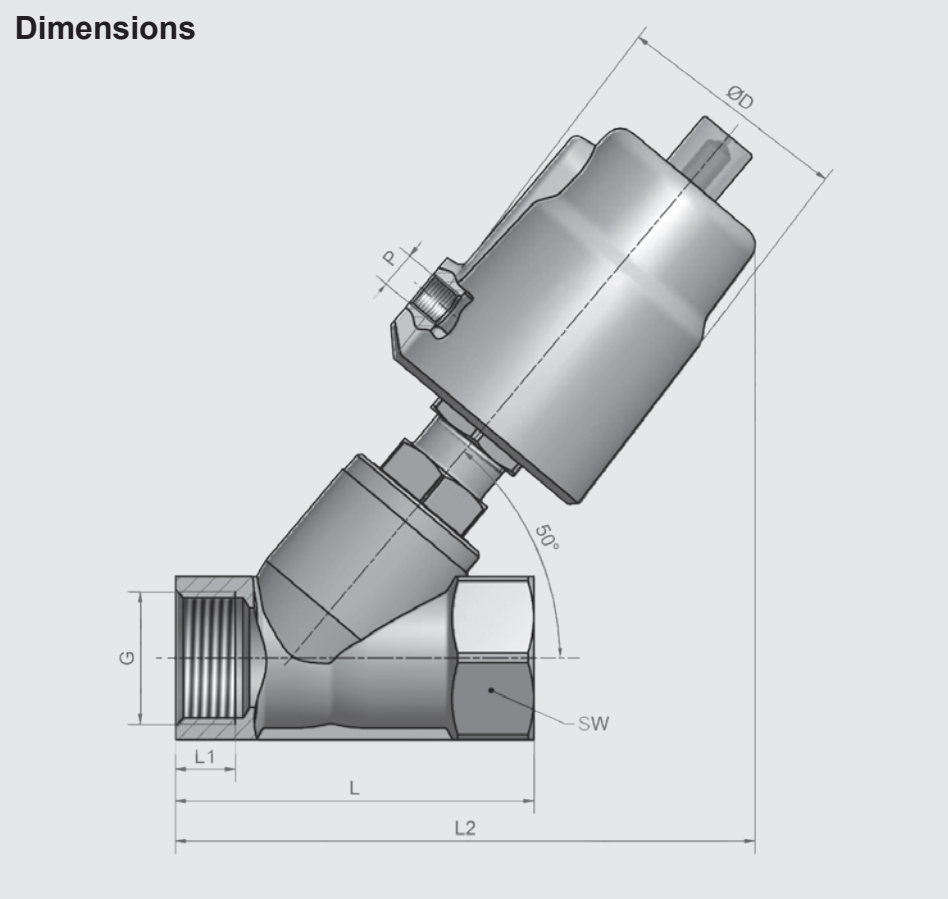

		Actuator Ø 50						Actuator Ø 80		
Red bronze	G	½	¾	1	1¼	1½	2	1¼	1½	2
	ØD	62	62	62	62	62	62	94	94	94
	P	G⅛	G⅛	G⅛	G⅛	G⅛	G⅛	G⅛	G⅛	G⅛
	L	57	68	80	97	107	124	97	107	124
	L1	8	9	10.5	12.5	14.5	16.5	12.5	14.5	16.5
	L2	135	140	145	150	155	160	195	205	215
	SW	27	33	41	50	56	68	50	56	68
	kg	1.2	1.3	1.5	1.8	2.4	3.5	3.0	3.4	4.5

Stainless steel	G	½	¾	1	1¼	1½	2	1¼	1½	2
	ØD	62	62	62	62	62	62	94	94	94
	P	G⅛	G⅛	G⅛	G⅛	G⅛	G⅛	G⅛	G⅛	G⅛
	L	65	75	90	110	120	150	110	120	150
	L1	12	13	15	17	19	21	17	19	21
	L2	140	145	150	155	160	175	200	210	230
	SW	27	32	42	50	55	70	50	55	70
	kg	1.3	1.4	1.6	2.2	2.5	3.5	3.2	3.4	4.6

⚠ The valves are technically configured for specific media and applications. This may result in deviations from the general information given in the data sheet in terms of the design, sealing materials and specifications.

Operating pressure / control pressure graph

Actuator Ø 50 mm

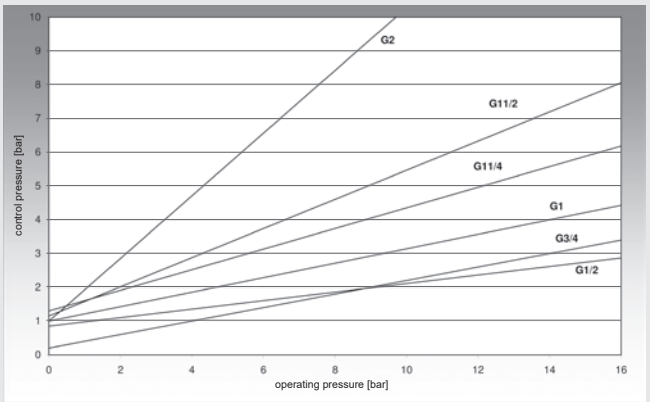

Actuator Ø 80 mm

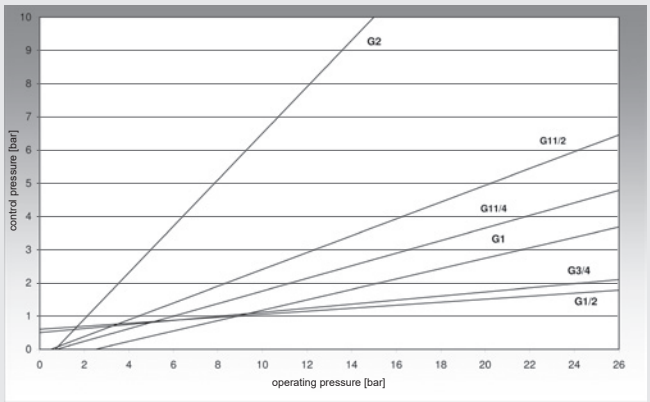

CXK01 NC closes with the flow, normally closed

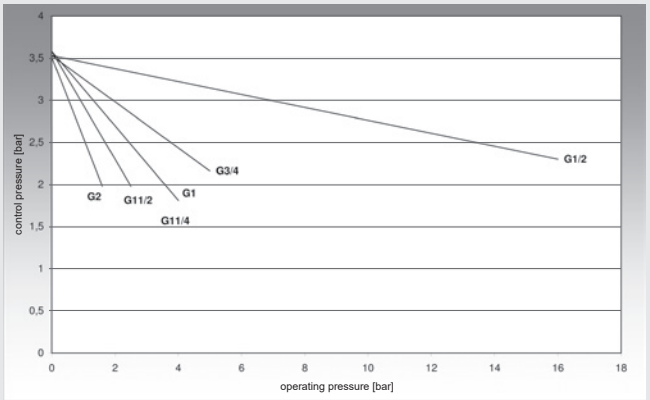

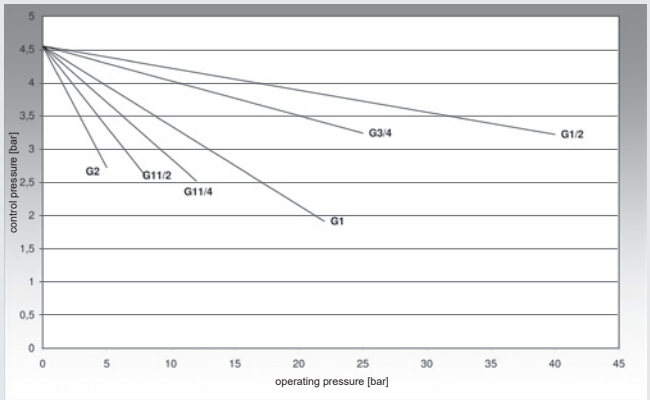

CXK02 NC closes against the flow, normally closed

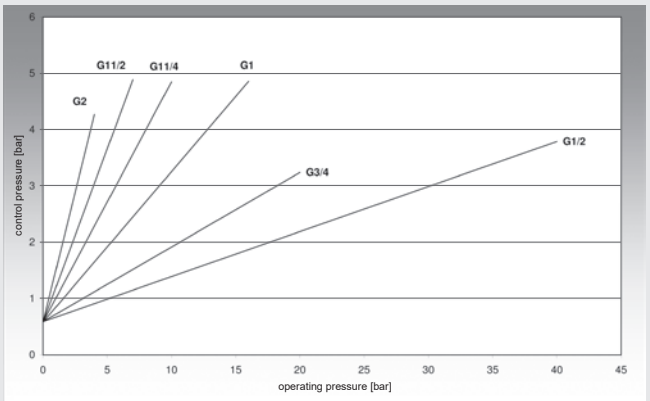

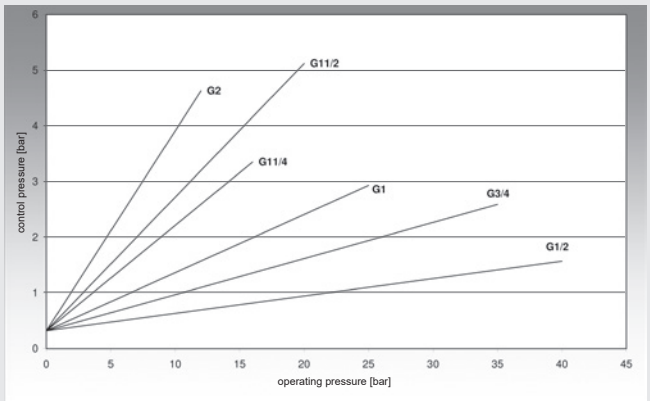

CXK02 NO closes against the flow, normally open

Accessories

Threaded connections	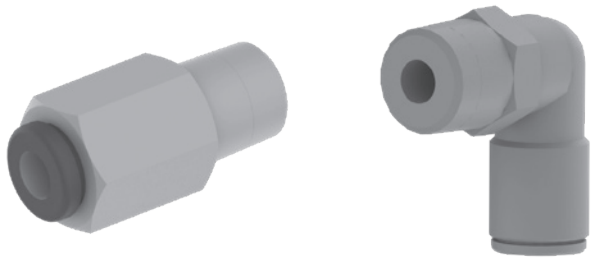
3/2-way pilot valve	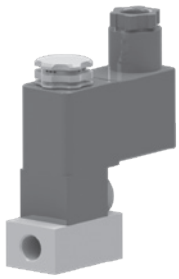

We would be happy to discuss your requirements for further options and accessories.

NOTE

The information in this brochure relates to the operating conditions and applications described. For applications and operating conditions not described, please contact the relevant technical department.

The operator is always responsible for determining the product suitability for the specific application. Quantified values for product characteristics are average values for a new product that undergo a time deterioration process.

Subject to technical modifications and errors.

HYDAC Accessories GmbH
Hirschbachstr. 2
66280 Sulzbach/Saar
Tel.: +49 (0)6897 - 509-01
Fax: +49 (0)6897 - 509-1009
Internet: www.hydac.com
E-Mail: accessories@hydac.com