HYDAC INTERNATIONAL

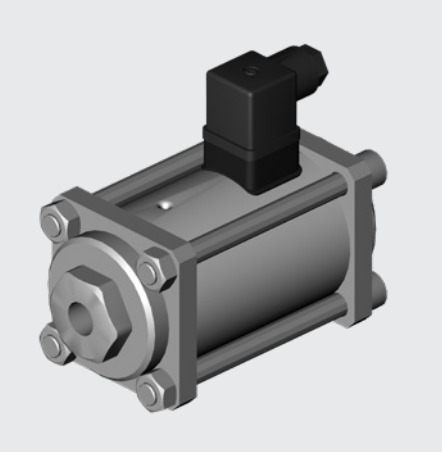

2/2-way coaxial valve
CXH direct acting
High-pressure valve

Switching function

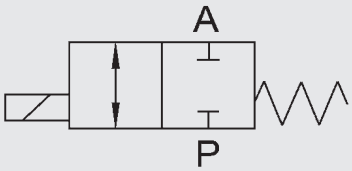

NC (closed when de-energised)

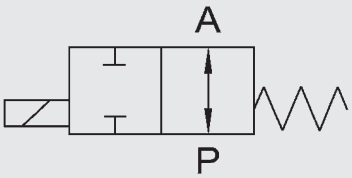

NO (open when de-energised)

Model code
(also example order)

CXH1	2/2	D	C	6	06	010	038	24V	...

Designation
CXH1 = series CXH1
CXH2 = series CXH2

Ways
2/2 = number of ways

Control
D = direct

Switching function
C = NC - closed when de-energised
O = NO - open when de-energised

Body material
6 = zinc-plated steel
7 = nickel-plated steel

Valve sizes
01 = DN 1
02 = DN 2
025 = DN 2.5
03 = DN 3
04 = DN 4
05 = DN 5
06 = DN 6

Pressure range (see table)
010 = 0 - 10 bar
016 = 0 - 16 bar
: :
: :
270 = 0 - 270 bar
300 = 0 - 300 bar

Connection
018 = G⅛
014 = G¼
038 = G⅜

Supply voltage
24V = 24 V DC
230V = 230 V AC 40 - 60 Hz

Options
see accessories

*optional

Ordering data
- Nominal size
- Connection
- NC / NO function
- Operating pressure
- Flow rate
- Fluid
- Temperature of fluid
- Ambient temperature
- Supply voltage

⚠ If order details or application data are inaccurate or incomplete, there is a risk that the technical configuration of the valves may not be correct for the desired use. This may result in the physical and/or chemical characteristics of the materials or seals used not being adequate for the intended use.

Technical specifications

Control	2/2-way valve, direct acting
Nominal size	DN01 to DN06
Pressure range (see table)	CXH1 - 2/2 DN02 to DN06 PN0 to PN100 CXH2 - 2/2 DN01 to DN06 PN0 to PN 300
Connection (see table)	Female threaded connection
Body material	Zinc-plated steel, nickel-plated steel
Seal material	Static: FKM Seat seal: PTFE
Back-pressure resistant	See table
Vacuum	Leakage rate < 10^{-6} mbar•l/s *
Media	gaseous, liquid
Flow direction P → A	CXH1 max. 100 bar CXH2 max. 300 bar
Temperature of medium	-10 °C to +100 °C
Ambient temperature	-10 °C to +50 °C
Mounting position	No orientation restrictions

Electrical part

Supply voltage	DC: 24 V AC: 230 V 50 Hz Special voltages on request
Electrical part	DC: DC solenoid AC: DC solenoid with integrated rectifier
Connection	Female connector DIN EN 175301-803, Form A, for AC operation with integrated rectifier
Voltage tolerance	±10 % to VDE 0580
Duty cycle	100 % duty cycle
IP class	IP 65 when connector is fitted

⚠ The material specification refers exclusively to the valve connection parts in contact with the medium. *optional

Series	DN [mm]	Pressure [bar] NC	Pressure [bar] NO	Back pressure A → P [bar]	Connection	Kv value [l/min]	Power consumption [W] 24 DC	Power consumption [W] 230 V 50 Hz	Weight [kg]
CXH1	2	0 - 100	0 - 100	100	G⅛, G¼, G⅜	2.5	35	41	1.7
	3	0 - 40	0 - 80	70	G⅛, G¼, G⅜	3.7	35	41	1.7
	4	0 - 20	0 - 40	34	G⅛, G¼, G⅜	6.5	35	41	1.7
	5	0 - 16	0 - 30	25	G⅛, G¼, G⅜	8.0	35	41	1.7
	6	0 - 10	0 - 18	15	G⅛, G¼, G⅜	9.5	35	41	1.7
CXH2	1	0 - 300	0 - 300	100	G⅛, G¼, G⅜	0.7	58	55	4.0
	2	0 - 300	0 - 300	50	G⅛, G¼, G⅜	1.9	58	55	4.0
	2.5	0 - 300	0 - 220	30	G⅛, G¼, G⅜	2.7	58	55	4.0
	3	0 - 270	0 - 150	24	G⅛, G¼, G⅜	4.6	58	55	4.0
	4	0 - 135	0 - 90	9	G⅛, G¼, G⅜	7.3	58	55	4.0
	5	0 - 90	0 - 60	3	G⅛, G¼, G⅜	8.2	58	55	4.0
	6	0 - 60	0 - 40	2	G⅛, G¼, G⅜	10.7	58	55	4.0

⚠ The valves are technically configured for specific media and applications. This may result in deviations from the general information given in the data sheet in terms of the design, sealing materials and specifications.

Dimensions
CXH1

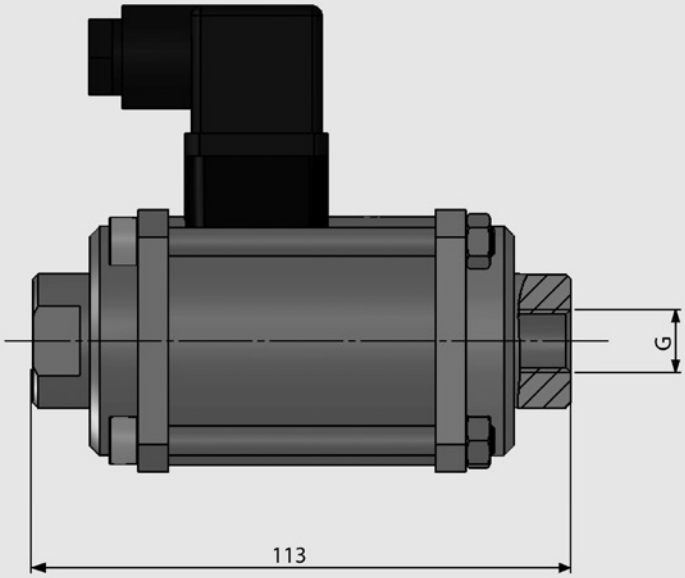

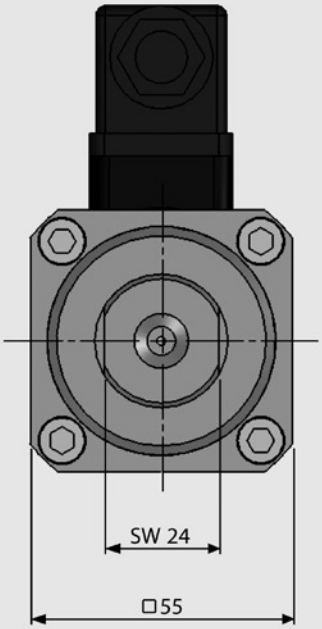

CXH2

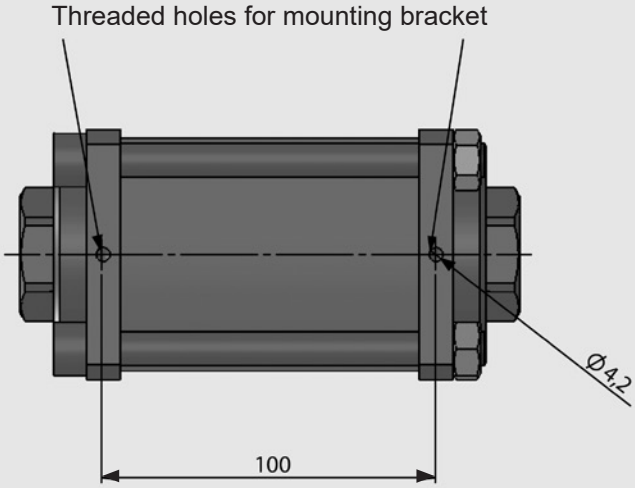

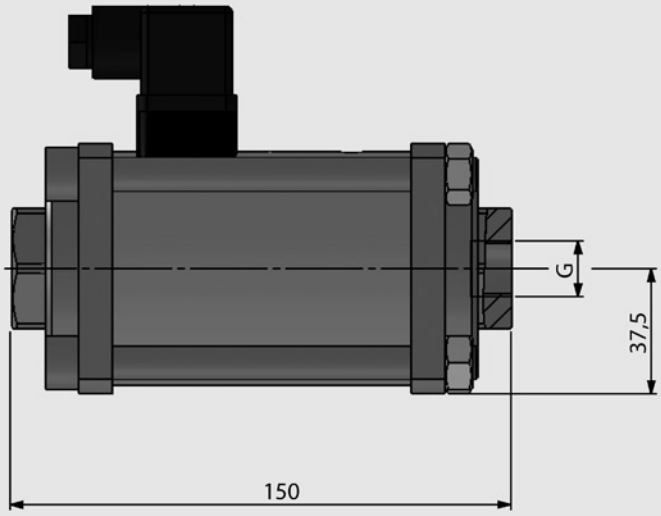

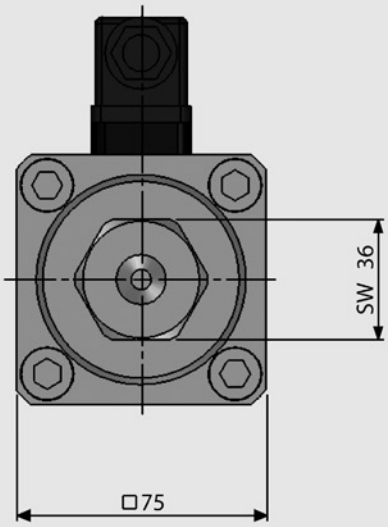

Accessories

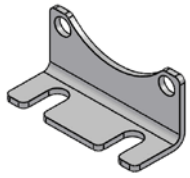

Mounting bracket
mechanical option = **HW**

Type	DN [mm]	F [mm]	H [mm]	J [mm]	K [mm]	L [mm]	M [mm]
CXH1	2-6	10	12	30	7	52	89
CXH2	1-6	10.5	-	45	7	70	139

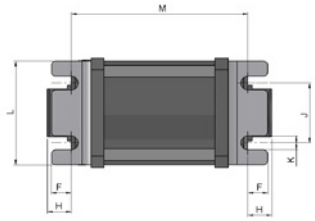

Female connector with LED
electrical option = **LED**

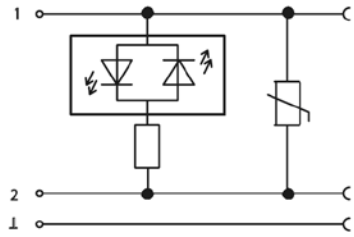

Female connector with power reduction
24 V DC
Form A
electrical option = **LS**

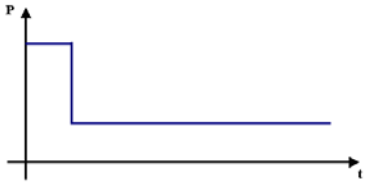

We would be happy to discuss your requirements for further options and accessories.

NOTE

The information in this brochure relates to the operating conditions and applications described. For applications and operating conditions not described, please contact the relevant technical department.

The operator is always responsible for determining the product suitability for the specific application. Quantified values for product characteristics are average values for a new product that undergo a time deterioration process.

Subject to technical modifications and errors.

HYDAC Accessories GmbH
Hirschbachstr. 2
66280 Sulzbach/Saar
Tel.: +49 (0)6897 - 509-01
Fax: +49 (0)6897 - 509-1009
Internet: www.hydac.com
E-Mail: accessories@hydac.com